NORMBAU
PASSION FOR CARE

Adjustable mirror, 590 x 500 mm

590 x 500mm, Ø 32mm side mirror brackets and operating handle made of stainless steel, material No. 1.4401 (A4, AISI 316), scratch-resitant powder coating with antibacterial protection. with adjustable part available in Cavere® colours. Adjustable mirror 500 x 500mm with cut edges and rounded corners, mounted on steel base plate, adjustable up to 25°, with cored roses 70mm dia. concealed screw fixing.
Supplied with 6mm dia x 70mm stainless Torx screws and plugs for solid masonry.

Product code	7466112
Product group	7010

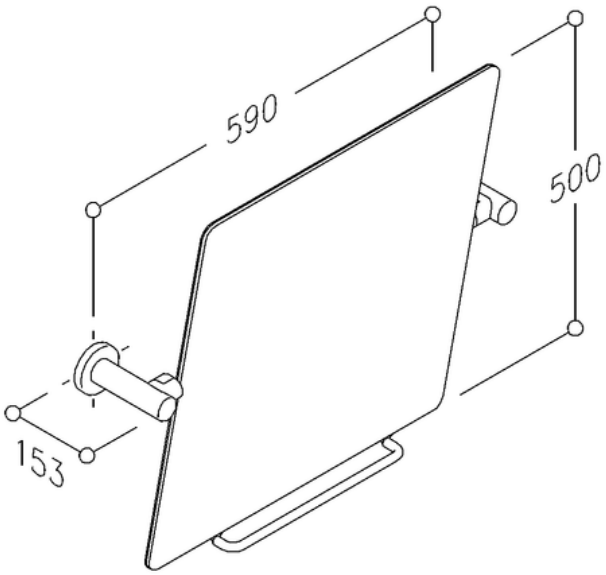

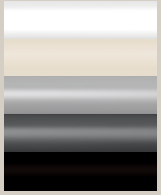

Cavere® white (092)
Satin beige (093)
Cavere® Silber Metallic (096)
Cavere® Anthrazit Metallic (095)
Carbon black (091)

NORMBAU GmbH
Schwarzwaldstraße 15
77871 Renchen/Germany
Telefon +49(0)7843 / 704 - 0
Telefax +49(0)7843 / 704 - 43
www.normbau.de · normbau@allegion.com

ALLEGION

(PDF-Datasheet, generated 30.07.2019, Copyright NORMBAU)